Connection of outside temperature sensor

TITANIC controller was equipped with the outlet for the connection of outside temperature sensor of „ProND" company. This sensor is available at boiler manufacturer, distributor or purchasing at "ProND" company.

The assembly of outside temperature sensor.

1. Unscrew the casing
2. Screw down a sensor of outside temperature for labeled pin „Weather sensor".
3. Pull the conductor through the cutout in back section of the controller.
4. Assembly the controller.
5. For the purpose of using installed weather sensor it is necessary to configure the temperature in the parameter **Choice of set temperature.**

Lithium CR2032 battery for maintaining a clock memory shall be installed on printed-circuit board. Battery replacement shall be conducted only by authorizes personnel in justified cases for example clock operation failure.

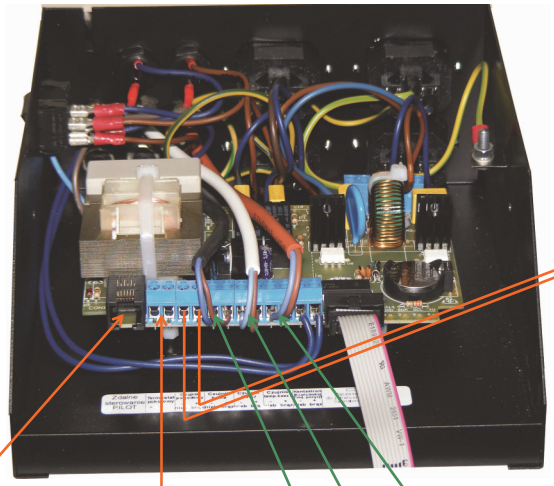

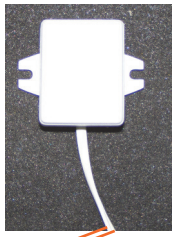

Connection socket remote control of ProND company for example PILOT R

Connector of temperature sensor Hopper / feeder

Connector of temperature sensor HOT TAP WATER CONTAINER - BOILER

Connector for room thermostat putting screws in it

Connector of temperature sensor CENTRAL HEATING BOILER

The connection polarization (polarity) is very important while connecting temperature sensors!!!
Conductors colours were labeled under the connectors.

Guarantee claims and inquiries on service and operation of a controller shall be directed to the controller manufacturer - PPHU „ProND" ul. Kręta 2, 63-645 Łęka Opatowska
http://www.prond.pl email: prond@prond.pl
telephone./fax. 62 7814398, 609564486 or 693864248

The controller manufacturer:
Service, Trade and Production Company „ProND"
ul. Kręta 2, 63-645 Łęka Opatowska
http://www.prond.pl email: prond@prond.pl
phone/fax 62 7814398 mobile 693864248 or 609564486

MAINTENANCE AND INSTALLATION MANUAL
The controller of central heating boiler operation with ribbon feeder

TITANIC

For the controller with network sockets in external casing

THE CONTENT OF MAINTENANCE AND INSTALLATION MANUAL:
- technical data, operations conditions, configuration,
- installation parameters and its description
- testing mode of outputs and sensors,

INSTRUCTION MANUAL is included in the pack

Software version: 6.14

Technical data

Supply voltage	~230 V; 50 Hz
Protection – safety fuse	6,3A / ~230 V
Temperature sensor of a boiler, feeder, hot tap water	DS18B20
Consumption of power (only the controller)	do 5 W
Protection level on the control panel side	IP 62
The range of temperature measurement	0¸100°C
Output current carrying capacity	
– central heating pumps ~230V; relay output with RC system	250 W
– hot tap water pumps ~230V; relay output with RC system	250 W
– blower ~230V; semiconductor output with RC system	250 W
– feeder ~230V; semiconductor output with RC system	250 W
Max. total output current	6 A
Temperature of emergency thermostat power-up	
- equipment external/internal	~90/~94 °C
- program-based	93 °C
Ambient temperature while the controller operation	5¸45 °C
Max. humidity	75 %
Activation of the pump in low temperature below 5 °C	
Activation of the pump	every 14 days in 1 minute
- it prevents against pump shutdown after heating season (the controller shall be engaged)	

Usage safety

1. In case of connecting (disconnecting) of devices to the controller it is necessary to unplug an outlet plug. The shutdown with the controller does not disconnect the voltage from outlets and electronic system.
2. With regard to the controller operations safety and associated devices it is necessary to connect the controller to three-wire installation (so called grounded socket). **Using a socket without protecting clamp connected can be a reason of the electric shock.**
3. Power cables cannot touch water jacket or chimney outlet.
4. The controller shall not be exposed to water and excessive humidity inside of the casing that can be a reason of the condensation (for example quick ambient temperature changes) and the effect of high temperature (over 45°C). It shall not be installed above the doors or other elements of central heating boiler that reach high temperature.
5. In case of ambiguities concerning the installation or the controller maintenance it is necessary to contact the controller manufacturer or authorized person.
6. While the storm the controller shall be unplugged form the outlet.
7. If the voltage is not supplied (or when the controller is disconnected from the network because of the storm) – and the boiler is fired up it is necessary to watch the water temperature (cannot boil).
8. The controller is not a final element of safety.
Extra protection shall be applied in systems where damages resulting from the controller failure can happen.
In installations of continuous operation - installation and control system shall be constructed in such a way to enable the operation of the system without the controller (exceptional cases - controller's failure)

Connection of room thermostat

For TITANIC controller the room thermostat of any manufacturer can be connected (room controller) equipped with potential-free relay outputs **or** control panel for example PILOT R (two can't operate at the same time)
Thermostat connection:
Switch off the controller from voltage. Unscrew the controller's cover. Screw down 2 conductors of a cable to described connector "Room thermostat" in TITANIC controller. Cutout is located in the casing, the label shall be cut in this place to enable the controllers casing assembly. Turn other side of cables to proper connectors in room thermostat.
Room temperature is lower than configured in thermostat
- closed contacts of room thermostat.
Temperature in the room is reached
- closed contacts of room thermostat

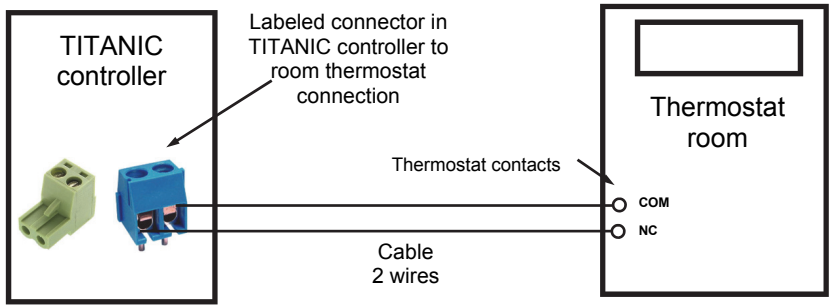

The connection to remote control panel

For control panel connection it is necessary to use 4 middle output lines from the controller. The connection of other lines brings a threat of the controller's damage. RJ12 pins clamped on telephone cable 4 conductors circular of flat shall be used for the connection. Connector and pins clamped are attached to each control panel.
Unscrew the controller's cover. For RJ12 socket insert the conductor with RJ12 pin clamped. Pull the conductor through the cutout in back section of the controller.
Conductor length connecting the controller with control panel shall not exceed 100 meters.
It is necessary to connect control panel on the conductor not longer than 100 meters and purchase special version of a pilot with DC socket for the purpose of connection of a power unit (in this case the 200 m transmission is possible!!!)

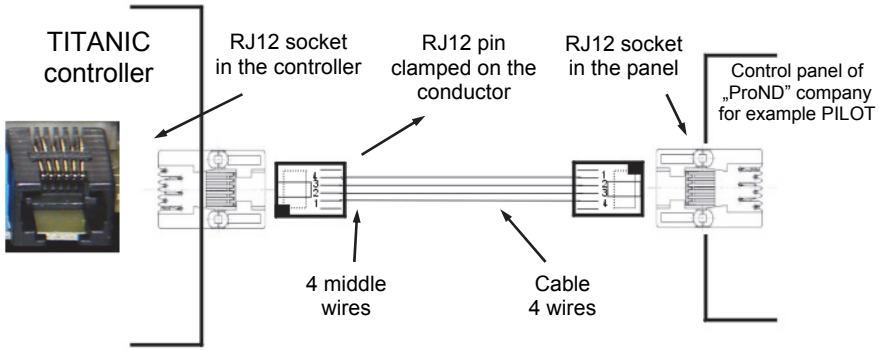

Assembly position of the controller on the boiler

Special operator's control panel with latches enable to install the controller in horizontal and vertical position – turn a panel upside down (180 degrees).
Pull a panel out of a casing with knife, lever one side of a casing and pull a panel out of a casing delicately. Turn a panel upside down and insert into a casing. Opening dimensions for a panel: 112-115mm x 57,5-58,5mm

Special latches enabling easy disassembly

Tape connecting operator's control panel with operating module

Vertical assembly of the controller:
- side insulation of central heating boiler,
- side insulation of furnace fuel container,
- wall next to central heating boiler

Horizontal assembly of the controller:
- upper insulation of central heating boiler,
- upper insulation of furnace fuel container,
- wall next to central heating boiler

Elements arrangement on back panel of the controller

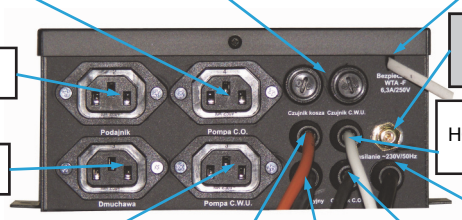

CONNECTION OUTLET CENTRAL HEATING PUMPS

SAFETY DEVICES WTA-F 6,3A/250V

CABLE FOR REMOTE CONNECTION OF CONTROL PANEL R PILOT or THERMOSTAT ROOM AND TEMPERATURE SENSOR AMBIENT TEMPERATURE
The cutout is located on a casing and the label shall be cut

„Chinch" outlet on a sensor of feeder position (Reed relay) concerns a feeder ram/carrier

CONNECTION OUTLET OF A FEEDER

TEMPERATURE SENSOR HOT TAP WATER CONTAINER - BOILER

CONNECTION OUTLET OF A BLOWER

POWER LEAD 230V / 50Hz

CONNECTION OUTLET HOT TAP WATER PUMP - BOILER

TEMPERATURE SENSOR CENTRAL HEATING BOILER

TEMPERATURE SENSOR FEEDER/HOPPER

EMERGENCY THERMOSTAT OF A BOILER THERMAL INSULATION FOR 90°C

INSTALLATION parameters of the TITANIC controller to the boiler with ribbon feeder

Parameter's name	Manufacturing setting of the controller producer	Setting suggested by boiler manufacturer	Range of parameter changes
1. Choice of set temperature	only the setting		only the setting: setting + zones; weather control weather control + zones
2. Limitation of minimal setting	35		30 - 65°C
3. Feeder circulation	8[sec]		5[sec] – 20[min] 59 [sec]
4. Feeder start	2[sec]		1 – 59[sec]
5. Temperature of controller shutdown	28		shutdown 20 - 50°C
6. Time of controller shutdown	15		1 - 99 [min]
7. Hysteresis of a boiler	1		1 - 9°C
8. Protection of a hopper	sensor		sensor, thermostat
9. Hopper sensor	70		40 - 80°C …switch off
10. Dosing time in failure	5		1 - 99 [min]
Dosing in failure	5		0 - 99 portions
11. Stroke at setting drop	15		switch off…05 - 30° C
12. Hot Tap Water surplus	5		switch off 1 - 10°C
13. Hot Tap Water rundown	3		0 - 30 [min]
14. Process power 11	40		10 - 55%
15. Process power 1	10		1 - 89%
16. Outside temperature of shut-down	25		16 - 40°C
17. Weather edition **Central heating setting at outside temperature for example**	switch off	switch off… -25; -15; -5; +5; +15 72; 64; 56; 48; 40	
18. Feeder type	screw-conveyor		skrew-conveyor; ram

Intended use and prospects of the TITANIC controller

The TITANIC controller is intended for boilers equipped with screw-conveyor or ram feeder of fuel. The control is carried out with liquid temperature measurement in central heating boiler and proper control of fuel combustion that prevents against burning out.
The controller regulates the operation of the following: feeder, blower, pump of central heating, pump of hot tap water.
Fan power is controlled fluently and this limits the amount of air delivered while burning.
Room thermostat or remote panel can be connected to the controller (for example PILOR R) , and it allow to keep the temperature inside of the room. The comfort of the controller using is increased.
The controller is equipped with the following:
- sensor of central heating temperature,
- sensor of a feeder temperature – protects the boiler against embers reverse to the feeder;
- sensor of hot tap water container
- thermostat of a boiler 90 °C – boiler's protection against the temperature rise above 90 °C
The controller regulates the operation of central heating and hot tap water pumps in four operation modes:

Operation system of the TITANIC controller

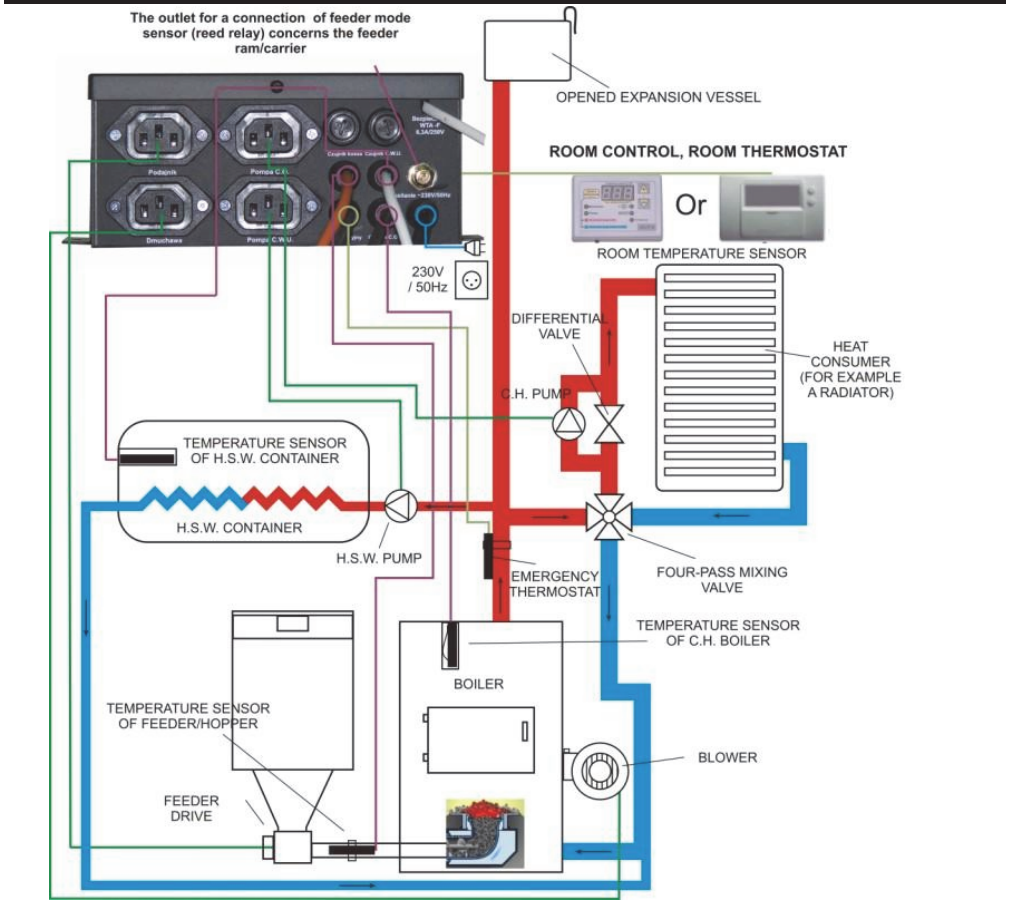

Testing mode of outputs and sensors

Upon boiler controller installation, connecting output devices and sensors the connection and sensors shall be checked. Speed of a blower for processes is verified in this mode.
In case of no changes in the fan speed in spite of processes change from 1 to 12 the parameters **Process power 11** and **Process power 1** shall be verified.
This mode shall be applied at the controller servicing.
Inputs for outputs, inputs and sensors testing
1. Switch off the controller
2. Keeping pushed [–] switch on the controller [⏻] (or power switch 0-1)
2. If the words *Test mode release buttons* occurs
Release button [⏻] and [–]
Next click of [P] displays:
Temperature of boiler sensor
Temperature of hopper sensor
Temperature of hot tap water sensor
Temperature of weather compensated sensor
Sensor of feeder position (normally opened or closed)
Condition of room thermostat (whether PILOT connected or normally closed thermostat input)
Blower test [+] i [–] blower speed at processes can be tested
Test of central heating pump [+] switch on; [–] switch off central heating pump
Hot tap water test [+] switch on; [–] switch off central heating pump
Feeder test [+] switch on; [–] switch off a feeder

While feeder testing on the display at right bottom section words closed/opened are presented. It is useful for time measurement of full feeder revolution and time of feeder start (for the time being closing contacts of sensor position does not happen). The time period shall be calculated according to formulae p. 6 and configure Feeder circulation and Feeder start respectively

Test mode exit:
- switch off and switch on the controller again with [⏻] button
(or power switch 0-1)

11. Process power 11	While **configuring 11 process**, the power shall be selected (%) in such a way that while power increasing the change in fan revolutions shall be slight. Process power 12 shall not be configured, as 12 process is available for users and is consistent with full network voltage (no phase control). The user can decrease max. revolutions to i.e. 11, and the controller shall not operate with a power greater than service mode configuration. Due to such setting, the user shall be able to use full range of fan speed while regulating a blower from 1 to 12 process
12. Process power 1	Configure to enable fan revolutions and provide trouble-free operation. If the fan is equipped with draught regulator it shall be taken into account while minimal revolutions setting. If the user shall select **Blower capacity** process 1, the fan shall operate with the same speed as in **process power 1**
13. Outside temperature of shutdown	With weather compensated control. Exceeding this temperature shall switch off central heating pump (hot tap water pump shall operate with no changes)
14. Weather edition **Central heating setting at Tz outside temperature**	While setting a boiler temperature according to weather compensated profile. Temperature setting of a boiler is configured on the basis of outside temperature and programmed heat curve. In this parameter the following is configured: Tz=-25 – operating temperature of a boiler at outside temperature -25°C. Factory setting 72°C Tz=-15 – operating temperature of a boiler at outside temperature -25°C. Factory setting 64°C Tz=-05 – operating temperature of a boiler at outside temperature -25°C. Factory setting 56°C Tz=+05 – operating temperature of a boiler at outside temperature -25°C. Factory setting 48°C Tz=+15 – operating temperature of a boiler at outside temperature -25°C. Factory setting 40°C
15. Feeder type **skrew-conveyor/ram**	Selection of a feeder type. Selection of other type of a feeder than factory-specified shall enable the controller and boiler operation. **For boilers with ram feeder the sensor of feeder position is required (reed relay).**

Installation parameters change of the controller

Input to installation parameters programming:

1. Switch off the controller with the breaker switch
2. Keeping P button pushed shut the controller off with ⏻ (or power switch 0-1)
2. If the inscription *Configuration release buttons* occurs

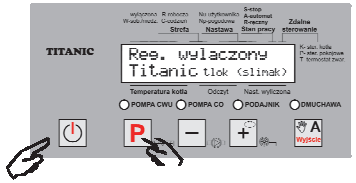

Release button ⏻ and P

First of set parameters shall occur.

Next click of the parameter P proceed to next parameters;

Admin password shall be configured as **10** on the display with Password word. When the password is configured the P click shall display installation parameters with pre-set values.

Buttons + i – are used to change values.

Keeping P pushed for 6 seconds saves changes.

Restart of the controller with saved changes is done.

The description of installation parameters and its effect on a boiler operation

Parameter's name	Description
1. Choice of set temperature	This parameter configures the temperature type for the controller: **only the setting** - temperature control of the boiler according to value configured in **Boiler setting** parameter **setting + zones** - temperature control of the boiler according to value configured in **Boiler setting** parameter +/- correction of temperature in parameters **Central Heating Correction** and **Hot Tap Water Correction** in determined time for changes activation – **Time of zone activation** **weather compensated control** – temperature control of a boiler according to weather profile. Temperature setting of a boiler is configured on the basis of outside temperature and programmed heat curve. **weather compensated control + zones** – temperature control of a boiler according to weather profile. Temperature setting of a boiler is configured on the basis of outside temperature and programmed heat curve. The temperature setting of a boiler is changed due to temperature corrections in the parameters **Central Heating Correction** and **Hot Tap Water Correction** in determined time of changes activation – **Time of zone activation**

2. Limitation of minimal setting	Minimal temperature value to be configured by the user. This parameter configures bottom temperature limit that cannot be exceeded while operating with room thermostat or remote controlled panel.
3. Circulation of a feeder	It is the time for the control of ram feeder position. Full circulation of the feeder starting from starting position to finishing position cannot be longer than the parameter setting. Circulation time shall be configured as 1,3-1,7 “actual time of feeder circulation” – full circulation. If actual time of feeder circulation shall exceed the parameter setting the controller shall switch off a feeder and a blower, the alarm of ram jam shall be displayed and the pump of central heating and hot tap water shall be switched on.
4. Start of a feeder	The jam control of ram **feeder** on starting position. If the position sensor relays shall not be opened upon determined time, the controller shall switch off a feeder and a blower, the alarm of ram jam shall be displayed and the pump of central heating and hot tap water shall be switched on. While testing it shall be configured at about 0.2-0.5 x „actual time of feeder circulation”.
5. Temperature of controller shutdown	If the temperature drops below this value in a boiler the timing configured in the parameter **Time for the controller shutdown** starts.
6. Time for the controller shutdown	If the boiler temperature shall be lower than the manufacturer setting, the boiler goes to “STOP” mode.
7. Hysteresis of a boiler	The difference between switching a boiler the phase „HEATING” and “SUPPORTING".
8. Protection of a hopper	The selection of a hopper protection. Digital sensor or binary thermostat; normally open contacts, when the critical temperature of a feeder is exceeded normally closed contacts.
9. Sensor of a hopper	If a feeder reaches configured temperature in this parameter the feeder power-up for the **dosing time in failure** and switching off a blower and pumps. Annotation!! The parameter configuration to *“switch off”* causes the protection disengage of a feeder prior to fire reverse from a furnace. The operations without the hopper is possible (some boilers are not equipped with temperature sensors of a hopper).
10. Dosing time in failure **Dosing in failure**	Switching on time of a feeder (fuel pouring) upon exceeding critical temperature and feeder temperature configured in the parameter the **hopper sensor.** The amount of fuel for ram feeder. If in 5 minutes the temperature shall reduce at 3°C the feeder shall be activated for the **dosing time in failure**. **Upon the temperature protection in a feeder, repeated return of the controller to normal operation can be achieved after temperature drop of a feeder at 3°C.** Manual reset of failure with A Wyjście button.

11. Leap at setting drop To ram feeder.	It concerns the boiler controller with ram feeder. If the controller operates in zone modes, the variation between zones can occur, for example in 1 zone the boiler temperature shall be 80°C and in the next 45°C. To prevent against the furnace burning out while long support and reducing i.e. from 80°C to 45°C and in some types of a boiler stepped reduction of configured temperature is required (Ns - calculated setting). If the parameter is configured at 10°C the boiler temperature shall be reduced from 80°C to 70°C (boiler temperature shall drop to „70°C-**boiler hysteresis**; and the controller shall increase the boiler temperature up to 70°C) afterwards, the temperature shall be reduced to 60°C, 50°C and finally 45°C. If the boiler construction does not require such stepped reduction, this parameter shall be switched off (switching off leap function at the setting drop).
12. Hot tap water surplus The surplus of boiler temperature to loading hot tap water container.	If the controller loads the hot tap water container, the boiler temperature is configured as the sum of parameters **hot tap water setting** and **hot tap water surplus**. *Switch off* – surplus switching off If the hot tap water temperature configured in the parameter **hot tap water setting** shall be higher than configured central heating temperature (Nu setting or for example +/- corrections) while loading hot tap water container the temperature in the boiler shall increase more than configured temperature – central heating pump shall be activated for 2 minutes every time configured at the parameter **The time of switching off the central heating pump** in the loading of hot tap water container. Central heating pump shall be switched on for 2 minutes every 5 minutes (time of switching off central heating pump is configured at every 5 minutes). If the container temperature in the circulation shall be too low while loading, the parameter **Time of switching off central heating pump** shall be decreased (than the central heating pump shall be engaged more often for 2 minutes).
13. Hot tap water rundown	This parameter determined the length of hot tap water pump operations upon reaching configured temperature of hot tap water. . This function stabilizes heating system, it is important especially in summer, if we use the boiler mainly to heat the water coming from central service water container. Reducing this parameter to 0 designates lack of rundown of central service water pump.